LOC Proceedings of oral presentation - FRIEND'97, Postojna 1-4 October 1997, Slovenia
Acta hydrotechnica 15/18 (1997), Ljubljana, 65-73.

ARTIFICIAL NEURAL NETWORKS AND CONCEPTUAL MODELS IN WATER MANAGEMENT OF SMALL BASINS IN THE CENTRAL UNITED STATES

A. SEZIN TOKAR[1] AND MOMCILO MARKUS[2]

Abstract

Inspired by the functioning of the brain and biological nervous systems, artificial neural networks (ANNs) have been applied to various engineering problems in the recent decade. In this study, an ANN methodology is compared with traditional conceptual models in predicting river runoff as a function of precipitation, snow, and temperature. The first example was the Fraser River near Granby, Colorado, where the ANN model was applied to monthly flow forecasting and compared to a conceptual Watbal model. The second example of the model application was the Raccoon Creek near Bayard, Iowa, where the accuracy of the ANN model in daily rainfall-runoff calibration was compared to that of the Sacramento Soil Moisture Accounting model (SAC-SMA). In both cases, the ANN model provided a more systematic approach, shortened the time spent in training of the models, and improved upon the flexibility of current methods. On the example of the Fraser River, ANNs produced more accurate monthly forecasts compared to Watbal. In the Raccoon River, several ANN models were applied to calibration of daily rainfall-runoff process. The best fit ANN model performed as well as the SAC-SMA. The initial results indicate that neural networks can be very useful in precipitation-runoff modeling for various time scales.

INTRODUCTION

The precipitation-runoff relationships are among the most complex, hydrologic phenomena to comprehend due to the tremendous spatial and temporal variability of watershed characteristics, snowpack and precipitation patterns, as well as a number of variables involved in the modeling the physical processes. For many years, engineers have attempted to understand transformation of rainfall and snow to runoff in order to forecast streamflow for the purpose of water supply, flood control, irrigation, drainage, water quality, power generation, recreation, and fish and wildlife propagation. The transformation of precipitation to watershed runoff involves many highly complex components, such as interception, depression storage, infiltration, overland flow,

[1] Office of Hydrology, National Oceanic and Atmospheric Administration, Silver Spring, Maryland, USA, National Research Council Research Associate

[2] Office of Hydrology, National Oceanic and Atmospheric Administration, Silver Spring, Maryland, USA, Research Hydrologist / UCAR Visiting Scientist

interflow, percolation, evaporation, and transpiration. Conceptual models provide daily, monthly, or seasonal estimates of streamflow for long-term forecasting on a continuous basis. The entire physical process in the hydrologic cycle is mathematically formulated in the conceptual models. Thus, they are composed of a large number of parameters; the SAC-SMA model is defined by 17 parameters in addition to 5 parameters required by the evapotranspiration demand curve (NWS, 1996), while the number of the Watbal model parameters can be much larger (Markus and Baker, 1994). Since there are numerous model parameters, and the interaction of these parameters is highly complicated, the optimization of model parameters is usually accomplished by a trial-and-error procedure. Therefore, the accuracy of model predictions is very subjective and highly dependent on the user's ability, knowledge, and understanding of the model and the watershed characteristics. In conceptual models, precipitation and evaporation data are usually employed as input data. In addition, streamflow data are required for the calibration of the model. Although well-calibrated conceptual models provide reasonable accuracy, their use is limited only to a small number of watersheds due to the difficulties discussed.

ANNs have been developed since the 1940s, but with the current algorithms that overcome the limitations of early networks, they have raised a great interest in practical applications in recent decades. There is a wide variety of ANN algorithms; however, the main function of all ANN paradigms is to map a set of inputs to a set of outputs. An ANN is described as an information processing system that is composed of many nonlinear and densely interconnected processing elements or neurons. ANNs have been proven to provide better solutions when applied to: (1) complex systems that may be poorly described or understood; (2) problems that deal with noise or involve pattern recognition, diagnosis, abstraction, and generalization; and (3) situations where input is incomplete or ambiguous by nature. It has been reported that an ANN has the ability to extract patterns in a phenomena and overcome difficulties due to the selection of a model form such as linear, power, or polynomial. An ANN algorithm is capable of modeling the rainfall/snowmelt-runoff relationship due to its ability to generalize patterns in noisy and ambiguous input data and to synthesize a complex model without prior knowledge or probability distributions. The ANN model is calibrated using automatic calibration techniques. Thus, an ANN model eliminates subjectivity and lengthy calibration cycles.

ARTIFICIAL NEURAL NETWORKS

An ANN is an information processing system that is composed of two main units: a processing element (or a neuron) that is analogous to a biological neuron and interconnections (or weights) between these elements that imitate the synaptic strength in a biological nervous system (Figure 1). In an ANN architecture, the neurons are arranged in groups called layers. Each neuron in a layer operates in logical parallelism. Information is transmitted from one layer to another in serial operations [Hecht-Nielsen, 1990]. A network can be composed of one to many layers. The basic structure of a network usually consists of three layers: the input layer, where the data are introduced to the network; the hidden layer(s), where data are processed; and the output layer, where the results for given inputs are produced (Figure 2).

The most distinctive characteristic of an ANN is its ability to learn from examples. Learning (or

training) is defined as self-adjustment of the network weights as a response to changes in its information environment. When a set of inputs is presented, a network adjusts weights in order to approximate the target output (observed or measured output) based on predefined rules and procedures. Learning in ANNs consists of three elements: weights between neurons that define the relative importance of the inputs, a transfer function that controls the generation of the output from a neuron, and learning laws that describe adjustments of the weights during training (Caudill, 1987). During learning a neuron receives inputs from the input or previous layer, weights each input with a preassigned value, and combines these weighted inputs. The combination of the weighted inputs is represented as:

$$net_j = \sum w_{ij} x_i \tag{1}$$

where net_j is the summation of weighted input for j^{th} neuron, w_{ij} is the weight from the ith neuron in the previous layer to the jth neuron in the current layer, and x_i is the input from the ith to the jth neuron. The net is either compared to a threshold or passed through a transfer function to determine the level of activation (Figure 1). If the activation of a neuron is strong enough, it produces an output that is sent as input to other neurons in the successive layer. A hyperbolic tangent function was employed as a transfer function in training of networks to model R-R relationship.

In this study, the training of ANNs was accomplished by a back-propagation algorithm. Back-propagation is the most commonly used supervised training algorithm in the multi-layer-feed-forward networks. In back-propagation networks, information is processed in the forward direction from the input layer to hidden layer(s) and then to the output layer (Figure 2). The objective of a back-propagation network is to find the weights which approximate target values of output with a selected accuracy. The least-mean-square-error method, along with the generalized-delta rule, is used to optimize the network weights in back-propagation networks. The gradient-descent method along with the chain rule of derivative is employed to modify the network weights. Detailed information is available on learning rules and back-propagation (Rumelhart, 1986; Hecht-Nielsen, 1990).

MODEL APPLICATION

The numerical algorithm based on ANNs was applied to two watersheds in the continental United States (Table 1). Historical measurements of precipitation (P), temperature (T), snow water equivalent (SWE), and stream discharge (Q) were available for the Fraser River. Also, historical observations of precipitation (P), temperature (T), and stream discharge (Q) were available for the Raccoon River.

Table 1. *Basic data for the basins used in this study.*

River	Middle Raccoon	Fraser
Station	near Bayard, Iowa	Granby, Colorado
Latitude	41°46'43"	40°08'49"
Longitude	94°29'33"	105°56'31"
Drainage Area (km^2)	960.0	458.2
Mean Annual Discharge (m^3/s)	7.4	6.2
Period of Record	1978-1993	1948-1994

FRASER RIVER

The first model is developed for one-step, monthly flow forecasts of the Fraser River in central Colorado. The Fraser River is a typical mountainous, subalpine river, with steep slopes, coniferous vegetation, and large snowpack accumulation in winter time. The discharge of the Fraser River is dominated by snowmelt in the late spring and early summer. The Fraser River flows into the Colorado - Big Thompson reservoir system. Therefore, timely and accurate forecasts of monthly volumes result in significant economic benefits.

ANNs are compared with the existing physically-based model, Watbal (Leaf, 1973, Leaf, 1975). Monthly data from the Fraser River were used to compare forecasts of the conceptual model, Watbal, and the ANN model. The analysis was performed only for the high flow months of May, June, July, and August. The available data from the Fraser River covered the periods 1951-1983 and 1987-1993. Watbal was first calibrated on the entire record, and then tested on 10 years of data (1981-1993 with 1984-1986 missing) within the calibration period. The ANN model was trained on the data from 1951-1980, and then tested on the same period as Watbal (1981-1993, excluding 1984-1986). The forecast equation based on ANNs has a general form:

$$Q(t)=f(Q(t-1),P(t-1),SWE(t-1),SWE(t-2),T(t-1)) \quad (2)$$

where Q(t) is the streamflow at time t, P(t-1) is the precipitation at time t-1, and T(t) is the temperature at time t; t is a month. The testing results for ANN and Watbal models are presented in Table 2.

Table 2. *Statistical indices for testing ANN and Watbal models developed using monthly streamflow of the Fraser River, Colorado. In the table RMSE and SD refer to root-mean-squared-error and standard deviation, respectively.*

Month	Model	RMSE/SD	Bias/Mean	Observed Mean (m^3/s)	Observed SD (m^3/s)
May	ANN	0.77	0.16	561	255
	WATBAL	0.95	0.41		
June	ANN	0.68	0.04	826	350
	WATBAL	0.69	0.04		
July	ANN	0.45	0.02	378	236
	WATBAL	0.69	0.01		
August	ANN	0.55	0.10	166	67
	WATBAL	1.51	0.39		
Average	ANN	0.61	0.08	483	908
	WATBAL	0.96	0.21		

The forecasts based on the ANN model were more accurate than the Watbal models for all months in terms of RMSE, and bias. The RMSE based on ANN was 17 percent smaller in May, approximately equal in June, and significantly smaller than the Watbal in July (35 percent), and August (63 percent).

The above results indicate that neural networks have a higher accuracy than Watbal for monthly forecasts on the Fraser river. Neural networks are also simpler, faster, and more flexible.

RACCOON RIVER

For the second example, various ANN models were trained to model daily relationships for the Raccoon River near Bayard, in Iowa. The loss of life and property in the Raccoon River region due to the Great Flood of 1993 led to a need for improved predictions to support flood/drought management and damage mitigation (NWS, 1994). The SAC-SMA model (NWS, 1996) is currently used by the NWS for rainfall-runoff calibration and operational flow forecasting. The calibration based on neural networks was compared to the SAC-SMA model.

In this study, four different models were tested. The models are represented by Eqs. 3 - 6:

$$Q(t)=f(P(t-1),P(t-2),P(t-3),T(t)) \quad (3)$$

$$Q(t)=f(P(t),P(t-1),P(t-2),P(t-3),T(t)) \quad (4)$$

$$Q(t)=f(P(t),P(t-1),P(t-2),P(t-3),P(t-4),T(t)) \quad (5)$$

$$Q(t)=f(P(t-1),P(t-2),P(t-3),T(t),Q(t-1)) \quad (6)$$

where Q(t) is the streamflow at time t, P(t-1) is the precipitation at time t-1, and T(t) is the temperature at time t; t is a day. The above four models were compared to the SAC-SMA using statistical indices: error in simulating minimum, mean, and maximum flow; RMSE relative to observed standard deviation; and coefficient of determination (square of correlation coefficient) between observed and simulated flows. The calibration period for both ANN and SAC-SMA was 1978 - 1993. The results are presented separately for the entire calibration period (Table 3) and an average- (Table 4), dry- (Table 5), and a wet-year data (Table 6).

Table 3. *Statistical indices for the calibration of ANN and SAC-SMA models.*

	SD	Mean Q	Max Q	Min Q	RMSE	RMSE /SD	R^2	# Param
Observed	16.0	7.5	512.6	0.16	-	-	-	-
model 1	11.7	8.0	480.1	5.50	10.5	0.66	0.57	61
Model 2	12.2	7.3	556.4	5.80	10.8	0.67	0.55	71
Model 3	12.0	7.3	466.3	3.90	10.2	0.64	0.60	81
Model 4	14.7	7.5	515.8	3.80	6.4	0.40	0.84	176
SAC-SMA	16.7	7.3	456.9	0.05	6.7	0.42	0.84	17

Table 4. *Statistical indices for training an average year (1986). Standard deviation for the observed data is 22.85 m^3/s.*

	Mean Q	RMSE	RMSE/ SD	R^2
Observed	10.10	-	-	-
Model 1	9.18	11.62	0.50	0.79
Model 2	8.55	11.83	0.52	0.76
Model 3	8.65	12.10	0.53	0.80
Model 4	9.61	11.10	0.49	0.77
SAC-SMA	10.73	8.61	0.38	0.86

Table 5. *Statistical indices for training a dry year (1992). Standard deviation for the observed data is 4.4 m^3/s.*

	Mean Q	RMSE	RMSE/ SD	R^2
Observed	5.18	-	-	-
Model 1	7.40	4.80	1.09	0.39
Model 2	6.68	4.72	1.07	0.36
Model 3	6.60	5.32	1.21	0.37
Model 4	5.74	2.59	0.59	0.68
SAC-SMA	4.71	3.41	0.78	0.57

Table 6. *Statistical indices for training a wet year (1993). Standard deviation for the observed data is 38.94 m^3/s*

	Mean Q	RMSE	RMSE/ SD	R^2
Observed	19.12	-	-	-
Model 1	10.56	18.85	0.48	0.81
Model 2	10.03	20.28	0.52	0.79
Model 3	10.29	17.11	0.44	0.87
Model 4	15.40	8.99	0.23	0.96
SAC-SMA	14.14	11.82	0.30	0.93

In comparing model prediction accuracy, Model 4 and SAC-SMA had the highest RMSE to SD ratio, about 0.40, while Models 1-3 had higher RMSE to SD ratios, ranging from 0.64 to 0.67. As shown in Table 3, the SAC-SMA model reproduced observed standard deviation and observed mean discharge values fairly well, while the ANN models provided less variation of the discharge values.

The SAC-SMA underestimated the minimum (69 percent) relative to the observed discharge. The maximum was also underestimated (11 percent) relative to the observed values. While ANN models closely approximated the maximum discharge compared to the observed value, they significantly overestimated the low flow values. A poor performance of ANNs in forecasting low flows is consistent with the results reported in recent literature (Tokar, 1996, Markus, 1996). Since separate testing data were not available at the time of this experiment, the sensitivity of model accuracy to the content of data was assessed using training data. Three years were selected based on the mean annual daily discharge values: an average, dry, and wet year. The goodness-of-fit statistics for the 3 years are presented in Tables 4, 5, and 6. As illustrated in Table 4, the SAC-SMA model provided a slightly higher model accuracy for average-year when compared to the model accuracy of ANN models. However, the SAC-SMA and Models 1 - 3 with high RMSE to SD ratios, fail to approximate the dry-year data as well as Model 4 (Table 5). Using wet-year data, Model 4 provided the lowest RMSE to SD ratio. Overall, Model 4 had the highest accuracy for the 3 years compared to the SAC-SMA and Models 1 - 3. This is explained by the fact that the addition of Q(t-1) provided information not contained in precipitation and temperature.

CONCLUSIONS

In the literature, the ANN methodology has been reported to provide reasonably good solutions for circumstances having complex systems that may be poorly defined or understood

using mathematical equations, problems that deal with noise or involve pattern recognition, and input data that are incomplete and ambiguous by nature. Because of these characteristics, it was believed that ANN could be applied to model precipitation-runoff relationships. The ANN rainfall-runoff models exhibit the ability to extract patterns in the training data.

The ANNs were applied to monthly forecasts in a sub-alpine region (Fraser River) and daily calibration in a flat region (Raccoon River). For the Fraser River, the ANN produced more accurate monthly forecasts than a physically-based model. For the Raccoon River, the ANN model provided reasonable training accuracy when compared to a conceptual model.

The above examples demonstrated that ANNs can acurately model nonlinear relationships between hydrologic inputs, rainfall, snow water equivalent, temperature, and output streamflow. The ANN models provided a systematic approach and shortened time spent on training of models compared to conceptual models.

Although the models were applied to only wo watersheds, the results presented here were encouraging, and demonstrated a high potential for the application of neural networks to hydrologic forecasting.

REFERENCES

Caudill, M., *Neural Network Primer, Part I*, AI Report, 46-52, December 1987.

Hecht-Nielsen, *Neurocomputing*, Addison-Wesley Publishing Company, 1990.

Leaf, C.F., and G.E. Brink, *Hydrologic Simulation Model of Colorado Subalpine Forest*, USDA Forest Service Research Paper RM-107, May 1973.

Leaf, C.F., and G.E. Brink, *Land Use Simulation Model of the Subalpine Coniferous Forest Zone*, USDA Forest Service Research Paper RM-135, February 1975.

Markus, M., *Application of Neural Networks in Streamflow Forecasting*, Doctoral Dissertation, Colorado State University, Fort Collins, Colorado, 1996.

Markus, M., and D. Baker, *The Fraser River, Streamflow Forecasting and Simulation Computer Package*, Technical Report, Northern Colorado Water Conservancy District, Loveland, Colorado, June 1994.

Muller, B. and J. Reinhardt, *Neural Networks, an Introduction*, Springler-Verlag, 1990.

National Weather Service (NWS), *The Great Flood of 1993, NOAA Natural Disaster Survey Report*, United States Department of Commerce, National Oceanic and Atmospheric Administration, National Weather Service, Office of Hydrology, Silver Spring, Maryland, February 1994.

National Weather Service (NWS), *National Weather Service River Forecast System (NWSRFS)*, United States Department of Commerce, National Oceanic and Atmospheric Administration, National Weather Service, Office of Hydrology, Silver Spring, Maryland, 1996.

Rumelhart, D.E., J.L. McClelland, and the PDP Research Group, *Parallel Distributed Processing - Volume I: Foundations*, The MIT Press, Massachusetts, 1986.

Tokar, A.S., *Rainfall-Runoff Modeling in an Uncertain Environment*, Doctoral Dissertation, University of Maryland, College Park, Maryland, 1996.

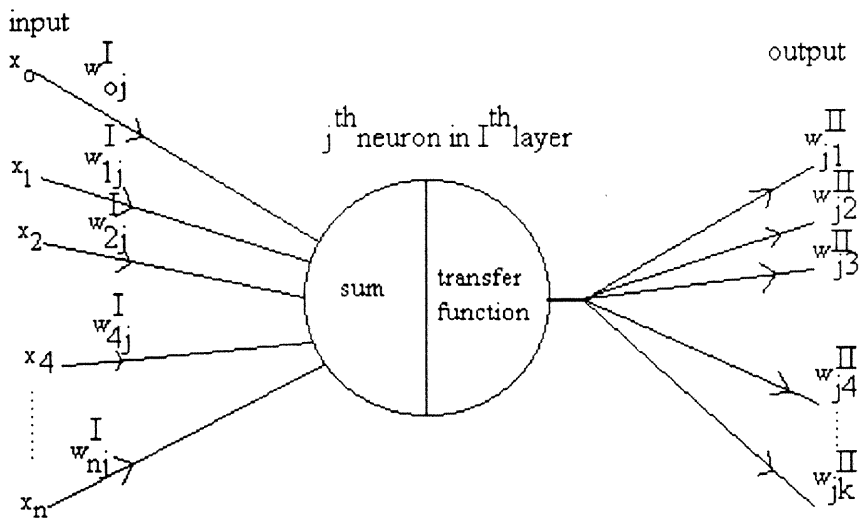

Figure 1. An Artificial neuron. In the figure, x_n refers to n^{th} input and w_{nj}^{I} is the weight from n^{th} input to j^{th} neuron in I^{th} layer.

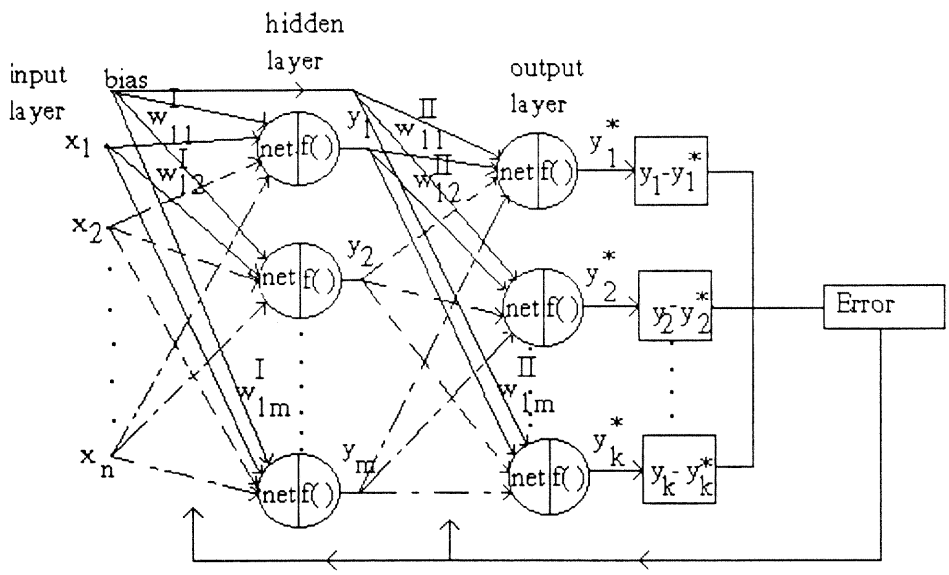

Figure 2. The schematic of a back-propagation network.